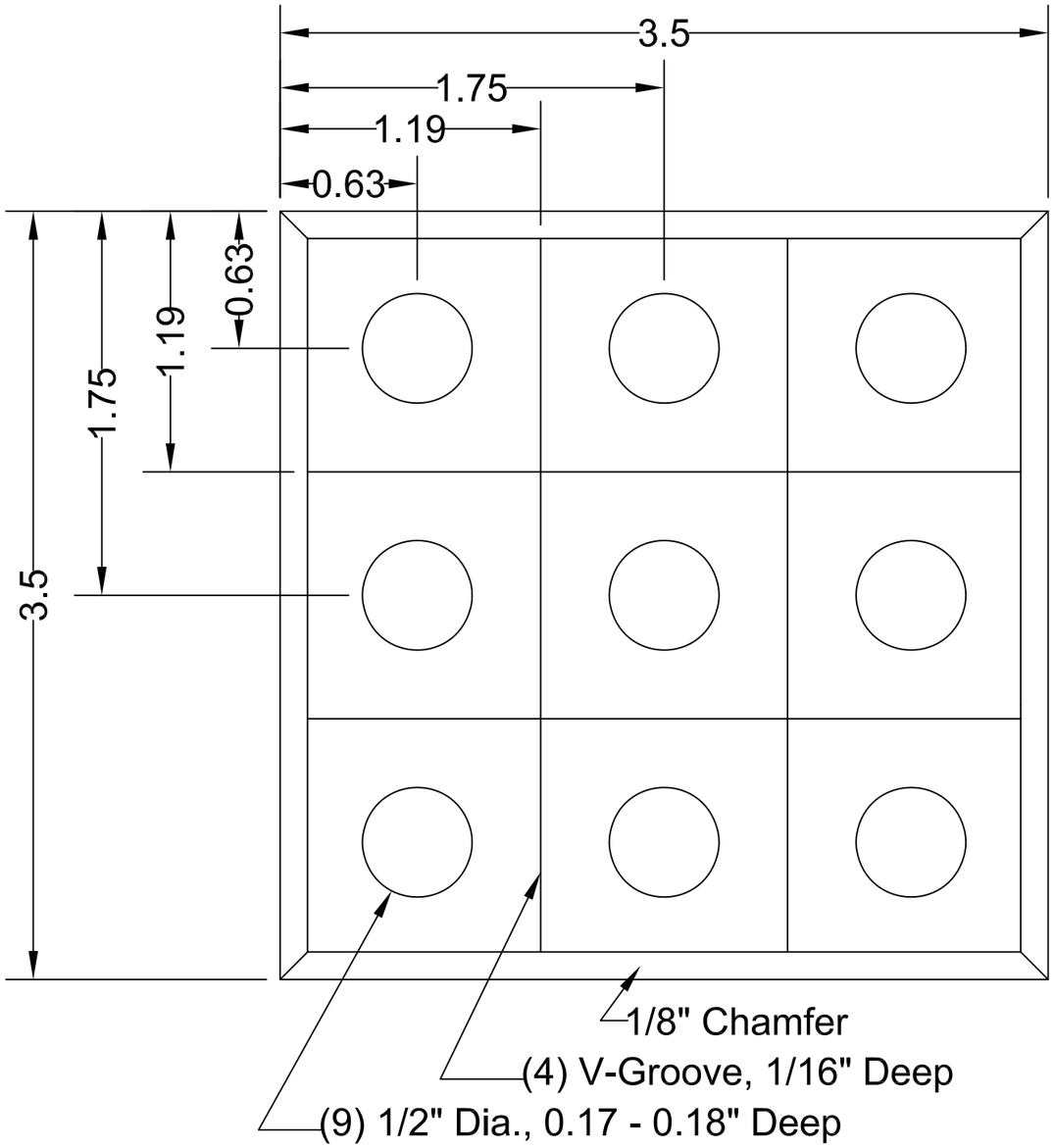

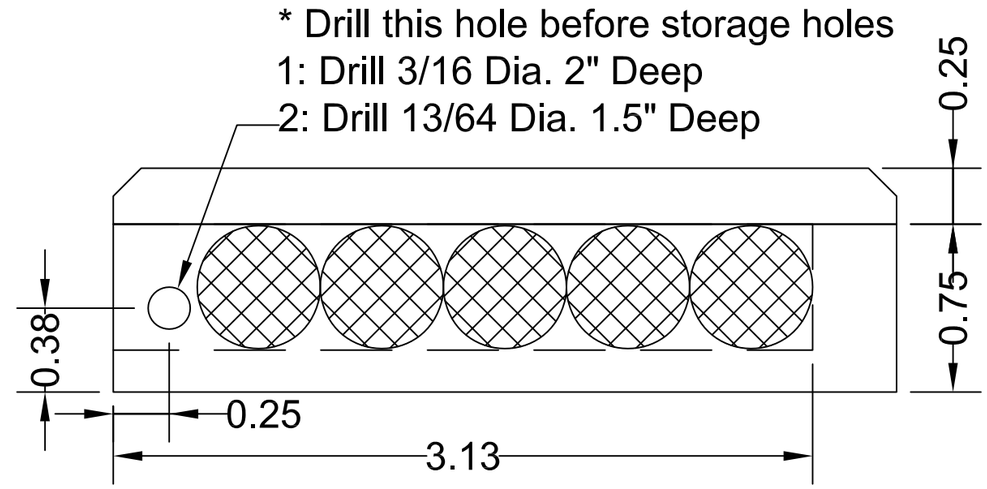

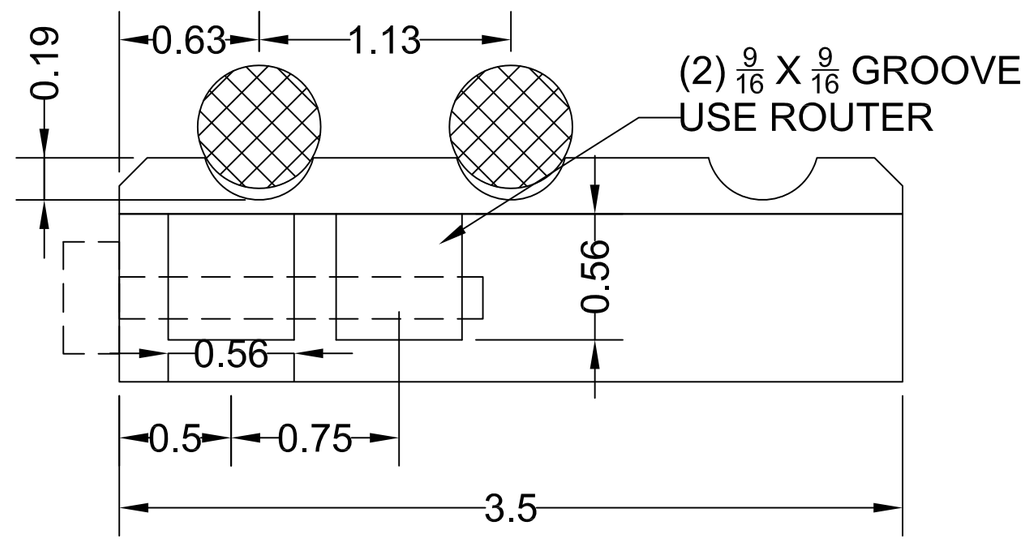

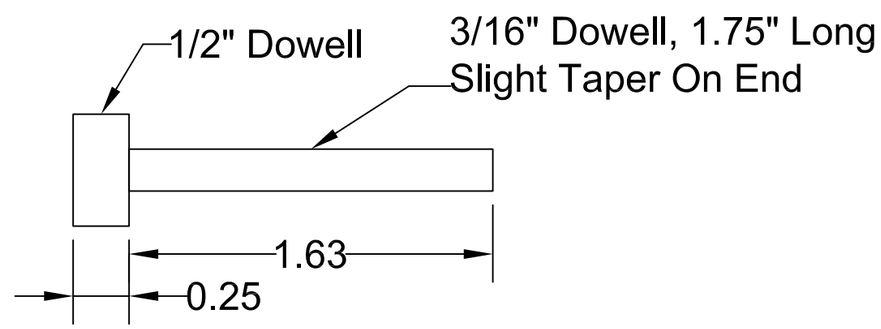

Assembly order
- Glue top to bottom before cutting.
- Cut pieces
- Drill the holes in the base
- Mark the holes in the top
- Route the marble holes on the top
- Route the grooves in the top
- Route the chamfer on the top
- Sand all surfaces

W H WHITE TECHNOLOGIES, LLC	TITLE: TIC-TAC-TOE	DATE: 12/14/2020